E79564-000 | FOSC450-A4-2-NT-0-N1V

FOSC® 450 A4 Fiber Optic Splice Closure, Gel Cable sealing, no pre-installed tray, 2 cable attach., one ground feedthrough lug, with test valve

- Single-ended, O-ring sealed dome closure for splicing feeder and distribution cables
- Gel cable sealing technology allows easy adding or removing of a wide size range of cables
- Compatible with most common cable types: e.g. loose tube, central core, ribbon fiber
- FOSC splice trays hinged for access to any splice without disturbing other trays
- Closure can be used in aerial, pedestal and underground (up to 5 meters) environments
- Compatible with CommScope's CWDM modules and optical splitter trays

Product Classification

Regional Availability	Latin America | North America
Product Type	Single-ended, round fiber closure
Product Brand	FOSC®
Product Series	FOSC 450

General Specifications

Cable Entry Drop Port Style	Round
Cable Entry Main Port Style	Round
Cable Ports Quantity, total	4 round ports
Cable Sealing Type	Compressed gel
Closure Sealing Type	Dome-to-base clamp with O-ring
Closure Style	Single-ended
Color	Black
Fiber Storage Basket Type	No basket
Flash Test Valve	Pre-installed
Ground Feed-through	None
Mounting	Pole | Strand | Wall
Network Area Type	Feeder
Splice Tray Included, quantity	0
Splice Tray Type Included	No trays
Splicing Capacity, Mass Fusion, maximum	144
Splicing Capacity, Single Fusion, maximum	96

©2024 CommScope, Inc. All rights reserved. CommScope and the CommScope logo are registered trademarks of CommScope and/or its affiliates in the U.S. and other countries. For additional trademark information see https://www.commscope.com/trademarks. All product names, trademarks and registered trademarks are property of their respective owners. Revised: September 13, 2024

Splicing Capacity, Single Splice, 12 fibers, maximum	96
Splicing Capacity, Single Splice, 6 fibers, maximum	48
Splicing Type, Supported	Mass fusion | Single fusion

Dimensions

Length	485 mm | 19.094 in
Diameter	150 mm | 5.906 in
Diameter, with clamp	205 mm | 8.071 in
Main Cable Diameter, maximum	25 mm | 0.984 in

Dimension Drawing

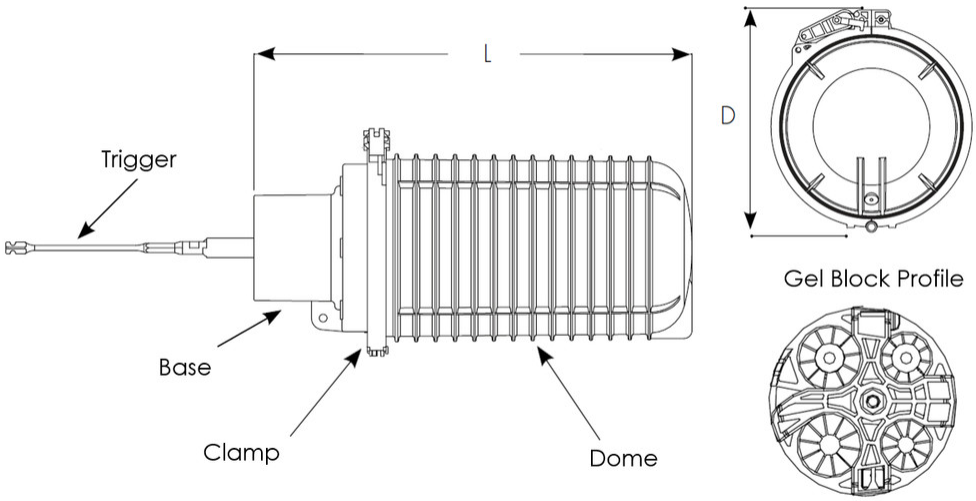

Ordering Tree

©2024 CommScope, Inc. All rights reserved. CommScope and the CommScope logo are registered trademarks of CommScope and/or its affiliates in the U.S. and other countries. For additional trademark information see https://www.commscope.com/trademarks. All product names, trademarks and registered trademarks are property of their respective owners. Revised: September 13, 2024

E79564-000 | FOSC450-A4-2-NT-0-N1V

FOSC 450 - XX - X - XX - X - X X X

Closure Size (inches)

A4	4 cable entry ports; 8 dia. x 19 long
BS	6 cable entry ports; 9 dia. x 19.5 long
B6	6 cable entry ports; 10 dia. x 24 long
C6	6 cable entry ports; 11.5 dia. x 23 long
D6	6 cable entry ports; 11.5 dia. x 30 long

Termination Hardware Quantity for the Kit

2	2 cable attachments included
4	4 cable attachments included
6	6 cable attachments included (N/A for A size)

Capacity and Type of Splice Tray

NT	No tray installed in factory
12	A, B, or C tray with two SM6 splice modules
24*	A, B, or C tray with two SM12 splice modules
36	D tray with six SM6 splice modules
72*	D tray with six SM12 splice modules
R1	A, B size ribbon tray (accommodates 12 ribbons/144 fibers)
R2	D size ribbon tray (24 ribbons/288 fibers)
R3	C size ribbon tray (18 ribbons/216 fibers)
SF	Stackable single fusion trays (12 splices)

*Note: SMOUV (1120-01) splice protection sleeves are highly recommended for use with SM12 splice modules.

Quantity of Splice Trays Factory Installed

0 or 1 is standard	Choose either "0" trays (no trays installed) or "1" tray installed. Additional trays sold separately.

Valve for Flash Testing

V	Valve (standard)
N	No Valve

Note: We recommend flash test valves for FOSC closures. However, non-valved closures are available upon request.

Number of Ground Feed-through Lugs

0	No grounding
1	1 ground feed-through lug (A4 only, N/A for BS)
3	3 ground feed-through lugs (B6, C6, and D6 closures only, N/A for BS)
6	6 ground feed-through lugs (C6 and D6 closure only, N/A for BS)

Note: FEG and MEG kits provide optional ground isolation for FOSC 450 closures.

Slack Basket Type

N	No Basket
A	A4 Standard Size
B	B6, BS Standard Size
C	C6 Standard Size
D	D6 Standard Size
E	Special Bulkhead Basket arrangement for B, BS closures only
T	Tall Size
S	Stackable Trays in D Closure

Note: D-size closures with "N" option include backbone used to route ribbons to ribbon trays. A and B-size closures include storage "socks".

Material Specifications

Material Type	Impact-resistant polymer

Environmental Specifications

Environmental Space	Below ground | Buried
Qualification Standards	IEC 61300, 5 m waterhead
Water Resistance	Flash test valve at 5 psi (40 kPa)

Packaging and Weights

Packaging quantity	1
Packaging Type	Box | Carton
Weight, net	2.72 kg | 5.997 lb

©2024 CommScope, Inc. All rights reserved. CommScope and the CommScope logo are registered trademarks of CommScope and/or its affiliates in the U.S. and other countries. For additional trademark information see https://www.commscope.com/trademarks. All product names, trademarks and registered trademarks are property of their respective owners. Revised: September 13, 2024

Regulatory Compliance/Certifications

Agency	Classification
CHINA-ROHS	Below maximum concentration value
ISO 9001:2015	Designed, manufactured and/or distributed under this quality management system
REACH-SVHC	Compliant as per SVHC revision on www.commscope.com/ProductCompliance
ROHS	Compliant
UK-ROHS	Compliant

©2024 CommScope, Inc. All rights reserved. CommScope and the CommScope logo are registered trademarks of CommScope and/or its affiliates in the U.S. and other countries. For additional trademark information see https://www.commscope.com/trademarks. All product names, trademarks and registered trademarks are property of their respective owners. Revised: September 13, 2024