F1-UMMU-8

FSJ1-50A Jumper with interface types UHF Male and UHF Male, 2.44 m

Product Classification

Product Type	SureFlex® standard
Product Series	FSJ1-50A

General Specifications

Body Style, Connector A	Straight
Body Style, Connector B	Straight
Interface, Connector A	UHF Male
Interface, Connector B	UHF Male
Specification Sheet Revision Level	A

Dimensions

Length	2.44 m | 8.005 ft
Nominal Size	1/4 in

Electrical Specifications

DTF, Connector A	-10 dB
DTF, Connector B	-10 dB

Jumper Assembly Sample Label

©2021 CommScope, Inc. All rights reserved. All trademarks identified by ® or ™ are registered trademarks, respectively, of CommScope. All specifications are subject to change without notice. See www.commscope.com for the most current information. Revised: December 4, 2020

F1-UMMU-8

Environmental Specifications

Immersion Test Method	Meets IEC 60529:2001, IP68 in mated condition

Regulatory Compliance/Certifications

Agency	Classification
ISO 9001:2015	Designed, manufactured and/or distributed under this quality management system

Included Products

35422-33	–	Heat Treated FSJ1-50A, HELIAX® Superflexible Low Density Foam Coaxial Cable, corrugated copper, 1/4 in, black PE Jacket
35422-75	–	Heat Treated FSJ1RK-50B, HELIAX® Superflexible Foam Coaxial Cable, corrugated copper, 1/4 in, black non-halogenated, fire retardant polyolefin jacket
F1MU	–	Mini UHF Male for 1/4 in FSJ1-50A cable
FSJ1-50A	–	FSJ1-50A, HELIAX® Superflexible Low Density Foam Coaxial Cable, corrugated copper, 1/4 in, black PE jacket
FSJ1RK-50A	–	FSJ1-50A, HELIAX® Superflexible Foam Coaxial Cable, corrugated copper, 1/4 in, black non-halogenated, fire retardant polyolefin jacket, B2ca s1a dO a1 Compliant

©2021 CommScope, Inc. All rights reserved. All trademarks identified by ® or ™ are registered trademarks, respectively, of CommScope. All specifications are subject to change without notice. See www.commscope.com for the most current information. Revised: December 4, 2020

35422-33

Heat Treated FSJ1-50A, HELIAX® Superflexible Low Density Foam Coaxial Cable, corrugated copper, 1/4 in, black PE Jacket

Product Classification

Product Type	Coaxial wireless cable
Product Brand	HELIAX®
Product Series	FSJ1-50A

General Specifications

Flexibility	Superflexible
Jacket Color	Black

Dimensions

Diameter Over Dielectric	4.826 mm | 0.19 in
Diameter Over Jacket	7.366 mm | 0.29 in
Inner Conductor OD	1.905 mm | 0.075 in
Outer Conductor OD	6.35 mm | 0.25 in
Nominal Size	1/4 in

Electrical Specifications

Cable Impedance	50 ohm ±1 ohm
Capacitance	79.4 pF/m | 24.201 pF/ft
dc Resistance, Inner Conductor	9.843 ohms/km | 3 ohms/kft
dc Resistance, Outer Conductor	6.562 ohms/km | 2 ohms/kft
dc Test Voltage	1600 V
Inductance	0.2 µH/m | 0.061 µH/ft
Insulation Resistance	100000 MOhms-km
Jacket Spark Test Voltage (rms)	5000 V
Operating Frequency Band	1 – 18000 MHz

©2021 CommScope, Inc. All rights reserved. All trademarks identified by ® or ™ are registered trademarks, respectively, of CommScope. All specifications are subject to change without notice. See www.commscope.com for the most current information. Revised: December 8, 2020

35422-33

Peak Power	6.4 kW
Velocity	82 %

VSWR/Return Loss

Frequency Band	VSWR	Return Loss (dB)
680–960 MHz	1.21	20.8
1700–2200 MHz	1.21	20.8
2200–2700 MHz	1.44	15

Attenuation

Frequency (MHz)	Attenuation (dB/100 m)	Attenuation (dB/100 ft)
0.5	0.407	0.124
1.0	0.577	0.176
1.5	0.707	0.215
2.0	0.816	0.249
10.0	1.833	0.559
20.0	2.6	0.792
30.0	3.192	0.973
50.0	4.136	1.261
85.0	5.419	1.652
88.0	5.516	1.681
100.0	5.889	1.795
108.0	6.12	1.867
150.0	7.25	2.21
174.0	7.825	2.385
200.0	8.408	2.563
204.0	8.495	2.589
300.0	10.373	3.162
400.0	12.051	3.673
450.0	12.817	3.906
500.0	13.545	4.128
512.0	13.715	4.18
600.0	14.909	4.544
700.0	16.175	4.93
800.0	17.362	5.292

©2021 CommScope, Inc. All rights reserved. All trademarks identified by ® or ™ are registered trademarks, respectively, of CommScope. All specifications are subject to change without notice. See www.commscope.com for the most current information. Revised: December 8, 2020

COMMSCOPE®

824.0	17.637	5.376
894.0	18.42	5.614
960.0	19.134	5.832
1000.0	19.556	5.96
1218.0	21.738	6.626
1250.0	22.044	6.719
1500.0	24.326	7.414
1700.0	26.038	7.936
1794.0	26.813	8.172
1800.0	26.862	8.187
2000.0	28.455	8.673
2100.0	29.227	8.908
2200.0	29.984	9.139
2300.0	30.727	9.365
2500.0	32.174	9.806
2700.0	33.576	10.233
3000.0	35.602	10.851
3400.0	38.183	11.638
3700.0	40.041	12.204
4000.0	41.841	12.753
5000.0	47.5	14.477
6000.0	52.747	16.077
8000.0	62.37	19.01
8800.0	65.974	20.108
10000.0	71.173	21.693
12000.0	79.393	24.198
14000.0	87.172	26.569
15800.0	93.872	28.611
16000.0	94.601	28.833
18000.0	101.745	31.01

Material Specifications

Dielectric Material	Foam PE
Jacket Material	PE
Inner Conductor Material	Copper-clad aluminum wire

©2021 CommScope, Inc. All rights reserved. All trademarks identified by ® or ™ are registered trademarks, respectively, of CommScope. All specifications are subject to change without notice. See www.commscope.com for the most current information. Revised: December 8, 2020

COMMSCOPE®

Outer Conductor Material	Corrugated copper

Mechanical Specifications

Minimum Bend Radius, multiple Bends	25.4 mm | 1 in
Minimum Bend Radius, single Bend	25.4 mm | 1 in
Number of Bends, minimum	15
Number of Bends, typical	20
Tensile Strength	68 kg | 149.914 lb
Bending Moment	1.1 N-m | 9.736 in lb
Flat Plate Crush Strength	1.8 kg/mm | 100.795 lb/in

Environmental Specifications

Installation temperature	-40 °C to +60 °C (-40 °F to +140 °F)
Operating Temperature	-55 °C to +85 °C (-67 °F to +185 °F)
Storage Temperature	-70 °C to +85 °C (-94 °F to +185 °F)
Attenuation, Ambient Temperature	68 °F | 20 °C
Average Power, Ambient Temperature	104 °F | 40 °C
Average Power, Inner Conductor Temperature	212 °F | 100 °C

Packaging and Weights

Cable weight	0.07 kg/m | 0.047 lb/ft

Regulatory Compliance/Certifications

Agency	Classification
ISO 9001:2015	Designed, manufactured and/or distributed under this quality management system
UL/ETL Certification	Compliant

©2021 CommScope, Inc. All rights reserved. All trademarks identified by ® or ™ are registered trademarks, respectively, of CommScope. All specifications are subject to change without notice. See www.commscope.com for the most current information. Revised: December 8, 2020

35422-75

Heat Treated FSJ1RK-50B, HELIAX® Superflexible Foam Coaxial Cable, corrugated copper, 1/4 in, black non-halogenated, fire retardant polyolefin jacket

Product Classification

Product Type	Coaxial wireless cable
Product Brand	HELIAX®
Product Series	FSJ1-50B

General Specifications

Flexibility	Superflexible
Jacket Color	Black

Dimensions

Diameter Over Dielectric	4.826 mm | 0.19 in
Diameter Over Jacket	7.62 mm | 0.3 in
Inner Conductor OD	1.905 mm | 0.075 in
Outer Conductor OD	6.35 mm | 0.25 in
Nominal Size	1/4 in

Electrical Specifications

Cable Impedance	50 ohm ±1 ohm
Capacitance	79.4 pF/m | 24.201 pF/ft
dc Resistance, Inner Conductor	9.843 ohms/km | 3 ohms/kft
dc Resistance, Outer Conductor	6.562 ohms/km | 2 ohms/kft
dc Test Voltage	1600 V
Inductance	0.2 µH/m | 0.061 µH/ft
Insulation Resistance	100000 MOhms-km
Jacket Spark Test Voltage (rms)	4000 V
Operating Frequency Band	1 – 18000 MHz

©2021 CommScope, Inc. All rights reserved. All trademarks identified by ® or ™ are registered trademarks, respectively, of CommScope. All specifications are subject to change without notice. See www.commscope.com for the most current information. Revised: December 8, 2020

35422-75

Peak Power	6.4 kW
Velocity	82 %

VSWR/Return Loss

Frequency Band	VSWR	Return Loss (dB)
680–960 MHz	1.21	20.8
1700–2200 MHz	1.21	20.8
2200–2700 MHz	1.44	15

Attenuation

Frequency (MHz)	Attenuation (dB/100 m)	Attenuation (dB/100 ft)	Average Power (kW)
1.0	0.577	0.176	6.4
1.5	0.707	0.215	6.4
2.0	0.816	0.249	6.4
10.0	1.833	0.559	3.99
20.0	2.6	0.792	2.81
30.0	3.192	0.973	2.29
50.0	4.136	1.261	1.77
85.0	5.419	1.652	1.35
88.0	5.516	1.681	1.33
100.0	5.889	1.795	1.24
108.0	6.125	1.867	1.19
150.0	7.25	2.21	1.01
174.0	7.825	2.385	0.93
200.0	8.408	2.563	0.87
204.0	8.495	2.589	0.86
300.0	10.373	3.162	0.71
400.0	12.051	3.673	0.61
450.0	12.817	3.906	0.57
460.0	12.965	3.952	0.56
500.0	13.545	4.128	0.54
512.0	13.715	4.18	0.53
600.0	14.909	4.544	0.49
700.0	16.175	4.93	0.45
800.0	17.362	5.292	0.42

©2021 CommScope, Inc. All rights reserved. All trademarks identified by ® or ™ are registered trademarks, respectively, of CommScope. All specifications are subject to change without notice. See www.commscope.com for the most current information. Revised: December 8, 2020

824.0	17.637	5.376	0.41
894.0	18.42	5.614	0.4
960.0	19.134	5.832	0.38
1000.0	19.556	5.96	0.37
1218.0	21.738	6.626	0.34
1250.0	22.044	6.719	0.33
1500.0	24.326	7.414	0.3
1700.0	26.038	7.936	0.28
1794.0	26.813	8.172	0.27
1800.0	26.862	8.187	0.27
2000.0	28.455	8.673	0.26
2100.0	29.227	8.908	0.25
2200.0	29.984	9.139	0.24
2300.0	30.727	9.365	0.24
2500.0	32.174	9.806	0.23
2700.0	33.576	10.233	0.22
3000.0	35.602	10.851	0.21
3400.0	38.183	11.638	0.19
3600.0	39.428	12.017	0.19
3700.0	40.041	12.204	0.18
3800.0	40.647	12.389	0.18
3900.0	41.247	12.571	0.18
4000.0	41.841	12.753	0.17
4100.0	42.429	12.932	0.17
4200.0	43.012	13.11	0.17
4300.0	43.59	13.286	0.17
4400.0	44.163	13.46	0.17
4500.0	44.73	13.633	0.16
4600.0	45.293	13.805	0.16
4700.0	45.852	13.975	0.16
4800.0	46.405	14.144	0.16
4900.0	46.955	14.311	0.16
5000.0	47.5	14.477	0.15
6000.0	52.747	16.077	0.14
8000.0	62.37	19.01	0.12

©2021 CommScope, Inc. All rights reserved. All trademarks identified by ® or ™ are registered trademarks, respectively, of CommScope. All specifications are subject to change without notice. See www.commscope.com for the most current information. Revised: December 8, 2020

8800.0	65.974	20.108	0.11
10000.0	71.173	21.693	0.1
12000.0	79.393	24.198	0.09
14000.0	87.172	26.569	0.08
15800.0	93.872	28.611	0.08
16000.0	94.601	28.833	0.08
18000.0	101.745	31.01	0.07

Material Specifications

Dielectric Material	Foam PE
Jacket Material	Non-halogenated, fire retardant polyolefin
Inner Conductor Material	Copper-clad aluminum wire
Outer Conductor Material	Corrugated copper

Mechanical Specifications

Minimum Bend Radius, multiple Bends	25.4 mm | 1 in
Minimum Bend Radius, single Bend	25.4 mm | 1 in
Number of Bends, minimum	15
Number of Bends, typical	20
Tensile Strength	68 kg | 149.914 lb
Bending Moment	1.1 N-m | 9.736 in lb
Flat Plate Crush Strength	1.8 kg/mm | 100.795 lb/in

Environmental Specifications

Installation temperature	-40 °C to +60 °C (-40 °F to +140 °F)
Operating Temperature	-40 °C to +60 °C (-40 °F to +140 °F)
Storage Temperature	-40 °C to +60 °C (-40 °F to +140 °F)
Attenuation, Ambient Temperature	68 °F | 20 °C
Average Power, Ambient Temperature	104 °F | 40 °C
Average Power, Inner Conductor Temperature	212 °F | 100 °C
Fire Retardancy Test Method	UL 1666/CATVR/CMR
Smoke Index Test Method	IEC 61034
Toxicity Index Test Method	IEC 60754-1 | IEC 60754-2

©2021 CommScope, Inc. All rights reserved. All trademarks identified by ® or ™ are registered trademarks, respectively, of CommScope. All specifications are subject to change without notice. See www.commscope.com for the most current information. Revised: December 8, 2020

Packaging and Weights

Cable weight	0.07 kg/m | 0.047 lb/ft

Regulatory Compliance/Certifications

Agency	Classification
ISO 9001:2015	Designed, manufactured and/or distributed under this quality management system
UL/ETL Certification	Compliant

©2021 CommScope, Inc. All rights reserved. All trademarks identified by ® or ™ are registered trademarks, respectively, of CommScope. All specifications are subject to change without notice. See www.commscope.com for the most current information. Revised: December 8, 2020

F1MU

Mini UHF Male for 1/4 in FSJ1-50A cable

Product Classification

Product Type	Wireless and radiating connector
Product Brand	HELIAX®

General Specifications

Body Style	Straight
Cable Family	FSJ1-50A
Inner Contact Attachment Method	Captivated
Inner Contact Plating	Silver
Interface	Mini UHF Male
Mounting Angle	Straight
Outer Contact Attachment Method	Crimp
Outer Contact Plating	Trimetal
Pressurizable	No

Dimensions

Height	11.68 mm | 0.46 in
Width	11.68 mm | 0.46 in
Length	37.59 mm | 1.48 in
Diameter	11.68 mm | 0.46 in
Nominal Size	1/4 in

Outline Drawing

©2021 CommScope, Inc. All rights reserved. All trademarks identified by ® or ™ are registered trademarks, respectively, of CommScope. All specifications are subject to change without notice. See www.commscope.com for the most current information. Revised: January 4, 2021

F1MU

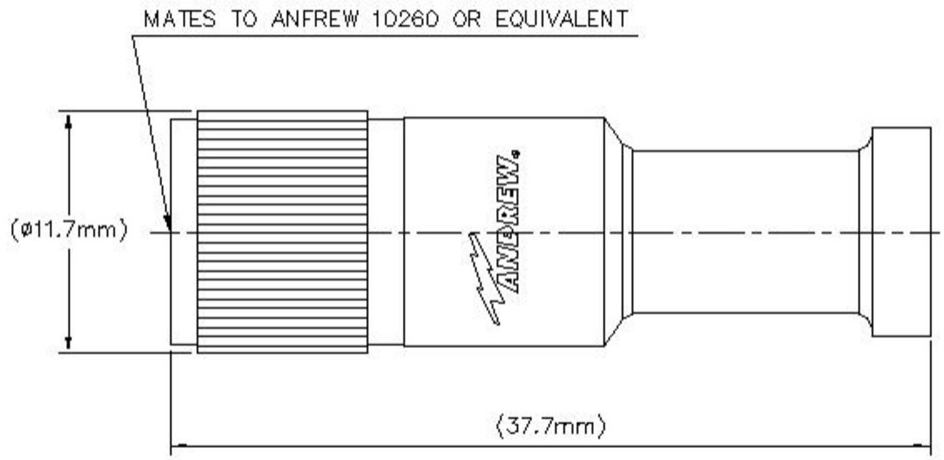

Electrical Specifications

3rd Order IMD at Frequency	-112 dBm @ 910 MHz
3rd Order IMD Test Method	Two +43 dBm carriers
Average Power at Frequency	0.4 kW @ 900 MHz
Cable Impedance	50 ohm
Connector Impedance	50 ohm
Insulation Resistance, minimum	5000 MOhm
Operating Frequency Band	0 – 1000 MHz

Mechanical Specifications

Connector Retention Tensile Force	449.27 N | 101 lbf
Interface Durability	500 cycles
Interface Durability Method	IEC 61169-4:17
Mechanical Shock Test Method	IEC 60068-2-27

Environmental Specifications

Operating Temperature	-55 °C to +85 °C (-67 °F to +185 °F)
Storage Temperature	-65 °C to +125 °C (-85 °F to +257 °F)
Attenuation, Ambient Temperature	20 °C | 68 °F

©2021 CommScope, Inc. All rights reserved. All trademarks identified by ® or ™ are registered trademarks, respectively, of CommScope. All specifications are subject to change without notice. See www.commscope.com for the most current information. Revised: January 4, 2021

Average Power, Ambient Temperature	40 °C | 104 °F
Average Power, Inner Conductor Temperature	100 °C | 212 °F
Corrosion Test Method	IEC 60068-2-11
Moisture Resistance Test Method	IEC 60068-2-3
Thermal Shock Test Method	IEC 60068-2-14
Vibration Test Method	IEC 60068-2-6

Packaging and Weights

Weight, net	13.6 g | 0.03 lb

Regulatory Compliance/Certifications

Agency	Classification
CHINA-ROHS	Below maximum concentration value
ISO 9001:2015	Designed, manufactured and/or distributed under this quality management system
REACH-SVHC	Compliant as per SVHC revision on www.commscope.com/ProductCompliance
ROHS	Compliant

©2021 CommScope, Inc. All rights reserved. All trademarks identified by ® or ™ are registered trademarks, respectively, of CommScope. All specifications are subject to change without notice. See www.commscope.com for the most current information. Revised: January 4, 2021

FSJ1-50A

FSJ1-50A, HELIAX® Superflexible Low Density Foam Coaxial Cable, corrugated copper, 1/4 in, black PE jacket

Product Classification

Product Type	Coaxial wireless cable
Product Brand	HELIAX® | SureFlex®
Product Series	FSJ1-50A | MLOC

General Specifications

Flexibility	Superflexible
Jacket Color	Black

Dimensions

Diameter Over Dielectric	4.826 mm | 0.19 in
Diameter Over Jacket	7.366 mm | 0.29 in
Inner Conductor OD	1.905 mm | 0.075 in
Outer Conductor OD	6.35 mm | 0.25 in
Nominal Size	1/4 in

Electrical Specifications

Cable Impedance	50 ohm ±1 ohm
Capacitance	79.4 pF/m | 24.201 pF/ft
dc Resistance, Inner Conductor	9.843 ohms/km | 3 ohms/kft
dc Resistance, Outer Conductor	7.216 ohms/km | 2.199 ohms/kft
dc Test Voltage	1600 V
Inductance	0.2 µH/m | 0.061 µH/ft
Insulation Resistance	100000 MOhms-km
Jacket Spark Test Voltage (rms)	5000 V
Operating Frequency Band	1 – 18000 MHz

©2021 CommScope, Inc. All rights reserved. All trademarks identified by ® or ™ are registered trademarks, respectively, of CommScope. All specifications are subject to change without notice. See www.commscope.com for the most current information. Revised: December 8, 2020

COMMSCOPE®

FSJ1-50A

Peak Power	6.4 kW
Velocity	82 %

VSWR/Return Loss

Frequency Band	VSWR	Return Loss (dB)
680–960 MHz	1.16	23.1
1700–2200 MHz	1.16	23.1
2200–2700 MHz	1.16	23.1

Attenuation

Frequency (MHz)	Attenuation (dB/100 m)	Attenuation (dB/100 ft)	Average Power (kW)
1.0	0.577	0.176	6.4
1.5	0.707	0.215	6.4
2.0	0.816	0.249	6.4
10.0	1.833	0.559	3.99
20.0	2.6	0.792	2.81
30.0	3.192	0.973	2.29
50.0	4.136	1.261	1.77
85.0	5.419	1.652	1.35
88.0	5.516	1.681	1.33
100.0	5.889	1.795	1.24
108.0	6.125	1.867	1.19
150.0	7.25	2.21	1.01
174.0	7.825	2.385	0.93
200.0	8.408	2.563	0.87
204.0	8.495	2.589	0.86
300.0	10.373	3.162	0.71
400.0	12.051	3.673	0.61
450.0	12.817	3.906	0.57
460.0	12.965	3.952	0.56
500.0	13.545	4.128	0.54
512.0	13.715	4.18	0.53
600.0	14.909	4.544	0.49
700.0	16.175	4.93	0.45
800.0	17.362	5.292	0.42

©2021 CommScope, Inc. All rights reserved. All trademarks identified by ® or ™ are registered trademarks, respectively, of CommScope. All specifications are subject to change without notice. See www.commscope.com for the most current information. Revised: December 8, 2020

COMMSCOPE®

824.0	17.637	5.376	0.41
894.0	18.42	5.614	0.4
960.0	19.134	5.832	0.38
1000.0	19.556	5.96	0.37
1218.0	21.738	6.626	0.34
1250.0	22.044	6.719	0.33
1500.0	24.326	7.414	0.3
1700.0	26.038	7.936	0.28
1794.0	26.813	8.172	0.27
1800.0	26.862	8.187	0.27
2000.0	28.455	8.673	0.26
2100.0	29.227	8.908	0.25
2200.0	29.984	9.139	0.24
2300.0	30.727	9.365	0.24
2500.0	32.174	9.806	0.23
2700.0	33.576	10.233	0.22
3000.0	35.602	10.851	0.21
3400.0	38.183	11.638	0.19
3600.0	39.428	12.017	0.19
3700.0	40.041	12.204	0.18
3800.0	40.647	12.389	0.18
3900.0	41.247	12.571	0.18
4000.0	41.841	12.753	0.17
4100.0	42.429	12.932	0.17
4200.0	43.012	13.11	0.17
4300.0	43.59	13.286	0.17
4400.0	44.163	13.46	0.17
4500.0	44.73	13.633	0.16
4600.0	45.293	13.805	0.16
4700.0	45.852	13.975	0.16
4800.0	46.405	14.144	0.16
4900.0	46.955	14.311	0.16
5000.0	47.5	14.477	0.15
6000.0	52.747	16.077	0.14
8000.0	62.37	19.01	0.12

©2021 CommScope, Inc. All rights reserved. All trademarks identified by ® or ™ are registered trademarks, respectively, of CommScope. All specifications are subject to change without notice. See www.commscope.com for the most current information. Revised: December 8, 2020

8800.0	65.974	20.108	0.11
10000.0	71.173	21.693	0.1
12000.0	79.393	24.198	0.09
14000.0	87.172	26.569	0.08
15800.0	93.872	28.611	0.08
16000.0	94.601	28.833	0.08
18000.0	101.745	31.01	0.07

Material Specifications

Dielectric Material	Foam PE
Jacket Material	PE
Inner Conductor Material	Copper-clad aluminum wire
Outer Conductor Material	Corrugated copper

Mechanical Specifications

Minimum Bend Radius, multiple Bends	25.4 mm | 1 in
Minimum Bend Radius, single Bend	25.4 mm | 1 in
Number of Bends, minimum	15
Number of Bends, typical	20
Tensile Strength	68 kg | 149.914 lb
Bending Moment	0.7 N-m | 6.196 in lb
Flat Plate Crush Strength	1.8 kg/mm | 100.795 lb/in

Environmental Specifications

Installation temperature	-40 °C to +60 °C (-40 °F to +140 °F)
Operating Temperature	-55 °C to +85 °C (-67 °F to +185 °F)
Storage Temperature	-70 °C to +85 °C (-94 °F to +185 °F)
Attenuation, Ambient Temperature	68 °F | 20 °C
Average Power, Ambient Temperature	104 °F | 40 °C
Average Power, Inner Conductor Temperature	212 °F | 100 °C

Packaging and Weights

Cable weight	0.07 kg/m | 0.047 lb/ft

©2021 CommScope, Inc. All rights reserved. All trademarks identified by ® or ™ are registered trademarks, respectively, of CommScope. All specifications are subject to change without notice. See www.commscope.com for the most current information. Revised: December 8, 2020

Regulatory Compliance/Certifications

Agency	Classification
CHINA-ROHS	Above maximum concentration value
ISO 9001:2015	Designed, manufactured and/or distributed under this quality management system
ROHS	Compliant
UL/ETL Certification	Compliant

©2021 CommScope, Inc. All rights reserved. All trademarks identified by ® or ™ are registered trademarks, respectively, of CommScope. All specifications are subject to change without notice. See www.commscope.com for the most current information. Revised: December 8, 2020

FSJ1RK-50A

FSJ1-50A, HELIAX® Superflexible Foam Coaxial Cable, corrugated copper, 1/4 in, black non-halogenated, fire retardant polyolefin jacket, B2ca s1a d0 a1 Compliant

Product Classification

Product Type	Coaxial wireless cable
Product Brand	HELIAX® | SureFlex®
Product Series	FSJ1-50A | MLOC

General Specifications

Flexibility	Superflexible
Jacket Color	Black

Dimensions

Diameter Over Dielectric	4.826 mm | 0.19 in
Diameter Over Jacket	7.62 mm | 0.3 in
Inner Conductor OD	1.905 mm | 0.075 in
Outer Conductor OD	6.35 mm | 0.25 in
Nominal Size	1/4 in

Electrical Specifications

Cable Impedance	50 ohm ±1 ohm
Capacitance	79.4 pF/m | 24.201 pF/ft
dc Resistance, Inner Conductor	9.843 ohms/km | 3 ohms/kft
dc Resistance, Outer Conductor	7.216 ohms/km | 2.199 ohms/kft
dc Test Voltage	1600 V
Inductance	0.2 µH/m | 0.061 µH/ft
Insulation Resistance	100000 MOhms-km
Jacket Spark Test Voltage (rms)	4000 V
Operating Frequency Band	1 – 18000 MHz
Peak Power	6.4 kW
Velocity	82 %

VSWR/Return Loss

Frequency Band	VSWR	Return Loss (dB)

©2021 CommScope, Inc. All rights reserved. All trademarks identified by ® or ™ are registered trademarks, respectively, of CommScope. All specifications are subject to change without notice. See www.commscope.com for the most current information. Revised: January 6, 2021

680–960 MHz	1.21	20.8
1700–2200 MHz	1.21	20.8
2200–2700 MHz	1.44	15

Attenuation

Frequency (MHz)	Attenuation (dB/100 m)	Attenuation (dB/100 ft)	Average Power (kW)
1.0	0.577	0.176	6.4
1.5	0.707	0.215	6.4
2.0	0.816	0.249	6.4
10.0	1.833	0.559	3.99
20.0	2.6	0.792	2.81
30.0	3.192	0.973	2.29
50.0	4.136	1.261	1.77
85.0	5.419	1.652	1.35
88.0	5.516	1.681	1.33
100.0	5.889	1.795	1.24
108.0	6.125	1.867	1.19
150.0	7.25	2.21	1.01
174.0	7.825	2.385	0.93
200.0	8.408	2.563	0.87
204.0	8.495	2.589	0.86
300.0	10.373	3.162	0.71
400.0	12.051	3.673	0.61
450.0	12.817	3.906	0.57
460.0	12.965	3.952	0.56
500.0	13.545	4.128	0.54
512.0	13.715	4.18	0.53
600.0	14.909	4.544	0.49
700.0	16.175	4.93	0.45
800.0	17.362	5.292	0.42
824.0	17.637	5.376	0.41
894.0	18.42	5.614	0.4
960.0	19.134	5.832	0.38
1000.0	19.556	5.96	0.37
1218.0	21.738	6.626	0.34

©2021 CommScope, Inc. All rights reserved. All trademarks identified by ® or ™ are registered trademarks, respectively, of CommScope. All specifications are subject to change without notice. See www.commscope.com for the most current information. Revised: January 6, 2021

1250.0	22.044	6.719	0.33
1500.0	24.326	7.414	0.3
1700.0	26.038	7.936	0.28
1794.0	26.813	8.172	0.27
1800.0	26.862	8.187	0.27
2000.0	28.455	8.673	0.26
2100.0	29.227	8.908	0.25
2200.0	29.984	9.139	0.24
2300.0	30.727	9.365	0.24
2500.0	32.174	9.806	0.23
2700.0	33.576	10.233	0.22
3000.0	35.602	10.851	0.21
3400.0	38.183	11.638	0.19
3600.0	39.428	12.017	0.19
3700.0	40.041	12.204	0.18
3800.0	40.647	12.389	0.18
3900.0	41.247	12.571	0.18
4000.0	41.841	12.753	0.17
4100.0	42.429	12.932	0.17
4200.0	43.012	13.11	0.17
4300.0	43.59	13.286	0.17
4400.0	44.163	13.46	0.17
4500.0	44.73	13.633	0.16
4600.0	45.293	13.805	0.16
4700.0	45.852	13.975	0.16
4800.0	46.405	14.144	0.16
4900.0	46.955	14.311	0.16
5000.0	47.5	14.477	0.15
6000.0	52.747	16.077	0.14
8000.0	62.37	19.01	0.12
8800.0	65.974	20.108	0.11
10000.0	71.173	21.693	0.1
12000.0	79.393	24.198	0.09
14000.0	87.172	26.569	0.08
15800.0	93.872	28.611	0.08

©2021 CommScope, Inc. All rights reserved. All trademarks identified by ® or ™ are registered trademarks, respectively, of CommScope. All specifications are subject to change without notice. See www.commscope.com for the most current information. Revised: January 6, 2021

16000.0	94.601	28.833	0.08
18000.0	101.745	31.01	0.07

Material Specifications

Dielectric Material	Foam PE
Jacket Material	Non-halogenated, fire retardant polyolefin
Inner Conductor Material	Copper-clad aluminum wire
Outer Conductor Material	Corrugated copper

Mechanical Specifications

Minimum Bend Radius, multiple Bends	25.4 mm | 1 in
Minimum Bend Radius, single Bend	25.4 mm | 1 in
Number of Bends, minimum	15
Number of Bends, typical	20
Tensile Strength	68 kg | 149.914 lb
Bending Moment	0.7 N-m | 6.196 in lb
Flat Plate Crush Strength	1.8 kg/mm | 100.795 lb/in

Environmental Specifications

Installation temperature	-40 °C to +60 °C (-40 °F to +140 °F)
Operating Temperature	-40 °C to +60 °C (-40 °F to +140 °F)
Storage Temperature	-40 °C to +60 °C (-40 °F to +140 °F)
Attenuation, Ambient Temperature	68 °F | 20 °C
Average Power, Ambient Temperature	104 °F | 40 °C
Average Power, Inner Conductor Temperature	212 °F | 100 °C
EN50575 CPR Cable EuroClass Fire Performance	B2ca
EN50575 CPR Cable EuroClass Smoke Rating	s1a
EN50575 CPR Cable EuroClass Droplets Rating	d0
EN50575 CPR Cable EuroClass Acidity Rating	a1
Fire Retardancy Test Method	IEC 60332-1 | IEC 60332-3-24 | NFPA 130-2010 | UL 1666/CATVR /CMR | UL 1685
Smoke Index Test Method	IEC 61034
Toxicity Index Test Method	IEC 60754-1 | IEC 60754-2

©2021 CommScope, Inc. All rights reserved. All trademarks identified by ® or ™ are registered trademarks, respectively, of CommScope. All specifications are subject to change without notice. See www.commscope.com for the most current information. Revised: January 6, 2021

Packaging and Weights

Cable weight	0.07 kg/m | 0.047 lb/ft

Regulatory Compliance/Certifications

Agency	Classification
CENELEC	EN 50575 compliant, Declaration of Performance (DoP) available
CHINA-ROHS	Below maximum concentration value
ISO 9001:2015	Designed, manufactured and/or distributed under this quality management system
REACH-SVHC	Compliant as per SVHC revision on www.commscope.com/ProductCompliance
ROHS	Compliant
UL/ETL Certification	Compliant

©2021 CommScope, Inc. All rights reserved. All trademarks identified by ® or ™ are registered trademarks, respectively, of CommScope. All specifications are subject to change without notice. See www.commscope.com for the most current information. Revised: January 6, 2021