F4PDF-C

7-16 DIN Female connector for 1/2 in FSJ4-50B cable

Product Classification

Product Type	Wireless and radiating connector
Product Brand	HELIAX®
Product Series	FSJ4-50B | FSJ4RK-50B
Ordering Note	CommScope® standard product (Global)

General Specifications

Body Style	Straight
Cable Family	FSJ4-50B
Inner Contact Attachment Method	Captivated
Inner Contact Plating	Silver
Interface	7-16 DIN Female
Mounting Angle	Straight
Outer Contact Attachment Method	Self-flare
Outer Contact Plating	Trimetal
Pressurizable	No

Dimensions

Length	50.04 mm | 1.97 in
Diameter	28.96 mm | 1.14 in
Nominal Size	1/2 in

Outline Drawing

©2024 CommScope, Inc. All rights reserved. CommScope and the CommScope logo are registered trademarks of CommScope and/or its affiliates in the U.S. and other countries. For additional trademark information see https://www.commscope.com/trademarks. All product names, trademarks and registered trademarks are property of their respective owners. Revised: August 13, 2024

F4PDF-C

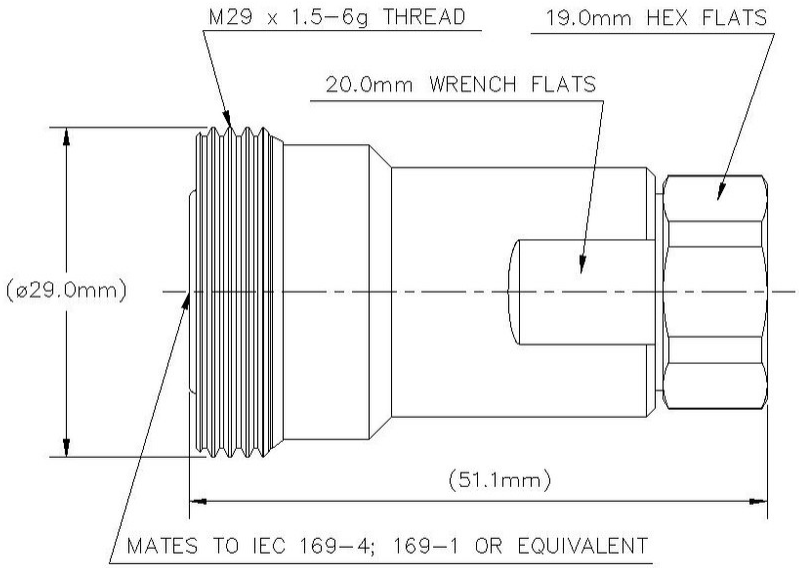

Electrical Specifications

3rd Order IMD at Frequency	-120 dBm @ 910 MHz
3rd Order IMD Test Method	Two +43 dBm carriers
Insertion Loss Coefficient, typical	0.05
Average Power at Frequency	1.0 kW @ 900 MHz
Cable Impedance	50 ohm
Connector Impedance	50 ohm
dc Test Voltage	2500 V
Inner Contact Resistance, maximum	0.8 mOhm
Insulation Resistance, minimum	5000 MOhm
Operating Frequency Band	0 – 7500 MHz
Outer Contact Resistance, maximum	1.5 mOhm
Peak Power, maximum	15.6 kW
RF Operating Voltage, maximum (vrms)	884 V
Shielding Effectiveness	-110 dB

VSWR/Return Loss

©2024 CommScope, Inc. All rights reserved. CommScope and the CommScope logo are registered trademarks of CommScope and/or its affiliates in the U.S. and other countries. For additional trademark information see https://www.commscope.com/trademarks. All product names, trademarks and registered trademarks are property of their respective owners. Revised: August 13, 2024

F4PDF-C

Frequency Band	VSWR	Return Loss (dB)
0–1000 MHz	1.023	38.89
1000–2000 MHz	1.025	38.17
2000–2300 MHz	1.029	36.9
2300–4000 MHz	1.119	25.01

Mechanical Specifications

Attachment Durability	25 cycles
Connector Retention Tensile Force	889.64 N | 200 lbf
Connector Retention Torque	5.42 N-m | 47.998 in lb
Insertion Force	200.17 N | 45 lbf
Insertion Force Method	IEC 61169-1:15.2.4
Interface Durability	500 cycles
Interface Durability Method	IEC 61169-4:9.5
Mechanical Shock Test Method	MIL-STD-202F, Method 213B, Test Condition C

Environmental Specifications

Operating Temperature	-55 °C to +85 °C (-67 °F to +185 °F)
Storage Temperature	-55 °C to +85 °C (-67 °F to +185 °F)
Attenuation, Ambient Temperature	20 °C | 68 °F
Average Power, Ambient Temperature	40 °C | 104 °F
Corrosion Test Method	MIL-STD-1344A, Method 1001.1, Test Condition A
Immersion Depth	1 m
Immersion Test Mating	Mated
Immersion Test Method	IEC 60529:2001, IP68
Moisture Resistance Test Method	MIL-STD-202F, Method 106F
Thermal Shock Test Method	MIL-STD-202, Method 107, Test Condition A-1, Low Temperature -55 °C
Vibration Test Method	MIL-STD-202F, Method 204D, Test Condition B
Water Jetting Test Mating	Mated
Water Jetting Test Method	IEC 60529:2001, IP66

Packaging and Weights

Weight, net	150 g | 0.331 lb

©2024 CommScope, Inc. All rights reserved. CommScope and the CommScope logo are registered trademarks of CommScope and/or its affiliates in the U.S. and other countries. For additional trademark information see https://www.commscope.com/trademarks. All product names, trademarks and registered trademarks are property of their respective owners. Revised: August 13, 2024

F4PDF-C

Regulatory Compliance/Certifications

Agency	Classification
CHINA-ROHS	Below maximum concentration value
ISO 9001:2015	Designed, manufactured and/or distributed under this quality management system
REACH-SVHC	Compliant as per SVHC revision on www.commscope.com/ProductCompliance
ROHS	Compliant
UK-ROHS	Compliant/Exempted

* Footnotes

Insertion Loss Coefficient, typical	0.05√¯freq (GHz) (not applicable for elliptical waveguide)
Immersion Depth	Immersion at specified depth for 24 hours

©2024 CommScope, Inc. All rights reserved. CommScope and the CommScope logo are registered trademarks of CommScope and/or its affiliates in the U.S. and other countries. For additional trademark information see https://www.commscope.com/trademarks. All product names, trademarks and registered trademarks are property of their respective owners. Revised: August 13, 2024