F4PKM-C

4.1-9.5 DIN Male for 1/2 in cable

OBSOLETE

This product was discontinued on: January 14, 2007

Product Classification

Product Type	Wireless and radiating connector
Product Brand	HELIAX®

General Specifications

Body Style	Straight
Inner Contact Attachment Method	Captivated
Inner Contact Plating	Silver
Interface	4.1-9.5 DIN Male
Mounting Angle	Straight
Outer Contact Attachment Method	Self-flare
Outer Contact Plating	Silver
Pressurizable	No

Dimensions

Length	50.8 mm | 2 in
Diameter	25.4 mm | 1 in
Nominal Size	1/2 in

Outline Drawing

©2024 CommScope, Inc. All rights reserved. CommScope and the CommScope logo are registered trademarks of CommScope and/or its affiliates in the U.S. and other countries. For additional trademark information see https://www.commscope.com/trademarks. All product names, trademarks and registered trademarks are property of their respective owners. Revised: July 15, 2024

F4PKM-C

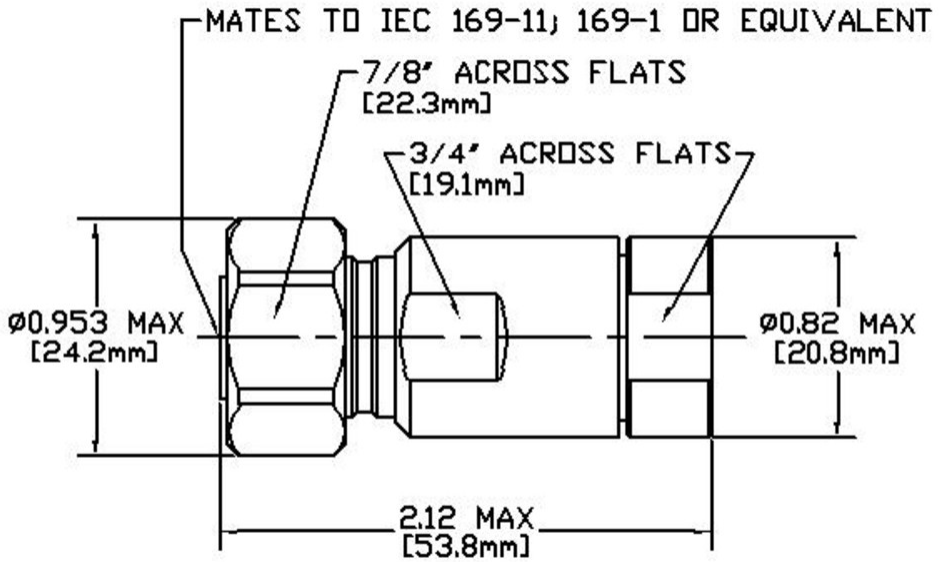

Electrical Specifications

Insertion Loss Coefficient, typical	0.05
Average Power at Frequency	1.0 kW @ 900 MHz
Cable Impedance	50 ohm
Connector Impedance	50 ohm
dc Test Voltage	2500 V
Inner Contact Resistance, maximum	0.8 mOhm
Insulation Resistance, minimum	5000 MOhm
Operating Frequency Band	0 – 4000 MHz
Outer Contact Resistance, maximum	2 mOhm
Peak Power, maximum	15.6 kW

Mechanical Specifications

Attachment Durability	25 cycles
Connector Retention Tensile Force	889.64 N | 200 lbf
Connector Retention Torque	5.42 N-m | 47.998 in lb
Insertion Force	80.07 N | 18 lbf
Insertion Force Method	IEC 61169-1:15.2.4
Interface Durability	500 cycles

©2024 CommScope, Inc. All rights reserved. CommScope and the CommScope logo are registered trademarks of CommScope and/or its affiliates in the U.S. and other countries. For additional trademark information see https://www.commscope.com/trademarks. All product names, trademarks and registered trademarks are property of their respective owners. Revised: July 15, 2024

Interface Durability Method	IEC 61169-4:9.5
Mechanical Shock Test Method	MIL-STD-202F, Method 213B, Test Condition C

Environmental Specifications

Operating Temperature	-55 °C to +85 °C (-67 °F to +185 °F)
Storage Temperature	-55 °C to +85 °C (-67 °F to +185 °F)
Attenuation, Ambient Temperature	20 °C | 68 °F
Average Power, Ambient Temperature	40 °C | 104 °F
Corrosion Test Method	MIL-STD-1344A, Method 1001.1, Test Condition A
Immersion Depth	1 m
Immersion Test Mating	Mated
Immersion Test Method	IEC 60529:2001, IP68
Moisture Resistance Test Method	MIL-STD-202F, Method 106F
Thermal Shock Test Method	MIL-STD-202, Method 107, Test Condition A-1, Low Temperature -55 °C
Vibration Test Method	MIL-STD-202F, Method 204D, Test Condition B
Water Jetting Test Mating	Mated
Water Jetting Test Method	IEC 60529:2001, IP66

Packaging and Weights

Weight, net	99.79 g | 0.22 lb

Regulatory Compliance/Certifications

Agency	Classification
CHINA-ROHS	Below maximum concentration value
REACH-SVHC	Compliant as per SVHC revision on www.commscope.com/ProductCompliance
ROHS	Compliant
UK-ROHS	Compliant

* Footnotes

Insertion Loss Coefficient, typical	0.05√freq (GHz) (not applicable for elliptical waveguide)
Immersion Depth	Immersion at specified depth for 24 hours

©2024 CommScope, Inc. All rights reserved. CommScope and the CommScope logo are registered trademarks of CommScope and/or its affiliates in the U.S. and other countries. For additional trademark information see https://www.commscope.com/trademarks. All product names, trademarks and registered trademarks are property of their respective owners. Revised: July 15, 2024