WB-K410-B

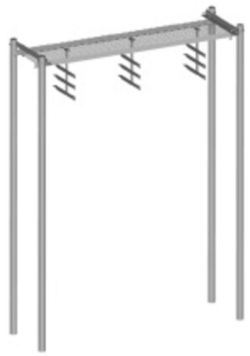

Safety Grated Waveguide Bridge Kit, 24 in x 10 ft, with four 13 ft 4 in direct burial posts

Product Classification

Product Type	Waveguide bridge kit

General Specifications

Application	Direct burial
Cable Runs, quantity	24
Pipe, quantity	4

Dimensions

Height	4064 mm | 160 in
Width	609.6 mm | 24 in
Length	3048 mm | 120 in
Pipe Length	4,053.84 mm | 159.6 in

©2024 CommScope, Inc. All rights reserved. CommScope and the CommScope logo are registered trademarks of CommScope and/or its affiliates in the U.S. and other countries. For additional trademark information see https://www.commscope.com/trademarks. All product names, trademarks and registered trademarks are property of their respective owners. Revised: August 20, 2024

WB-K410-B

Outline Drawing

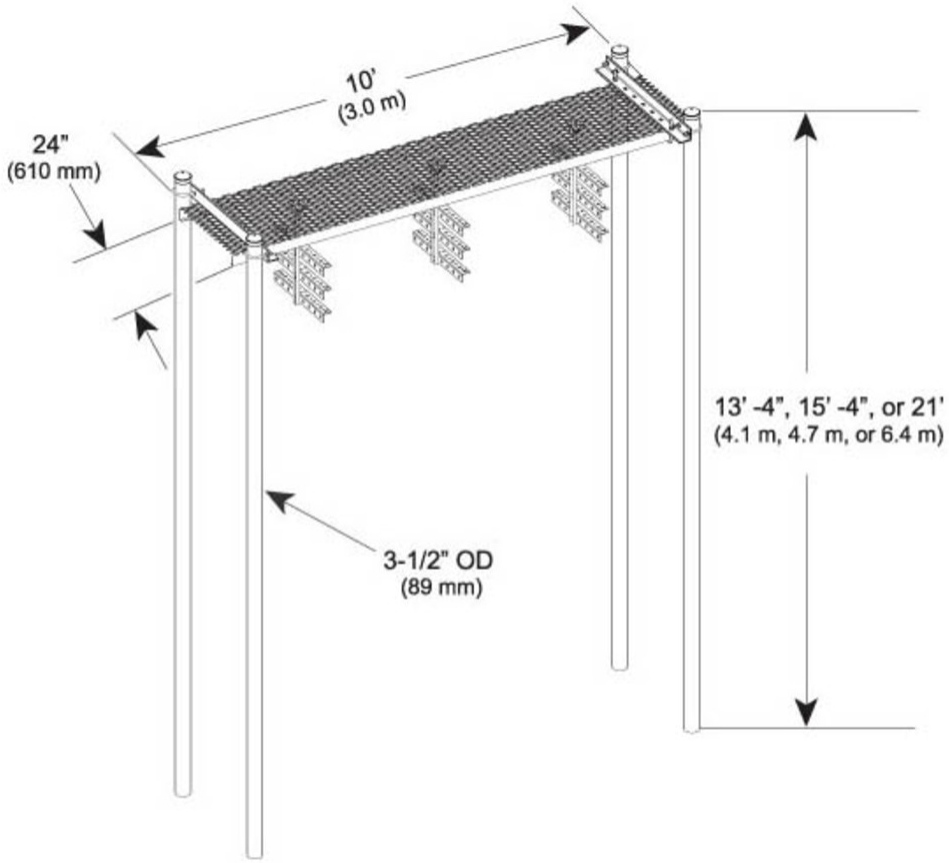

Material Specifications

Material Type	Hot dip galvanized steel

Packaging and Weights

Included	Caps | Channel | Hardware | Posts | Support brackets | Trapeze
Packaging quantity	1
Weight, net	270.4 kg | 596.129 lb

Regulatory Compliance/Certifications

Agency	Classification
CHINA-ROHS	Above maximum concentration value
ISO 9001:2015	Designed, manufactured and/or distributed under this quality management system

©2024 CommScope, Inc. All rights reserved. CommScope and the CommScope logo are registered trademarks of CommScope and/or its affiliates in the U.S. and other countries. For additional trademark information see https://www.commscope.com/trademarks. All product names, trademarks and registered trademarks are property of their respective owners. Revised: August 20, 2024

WB-K410-B

ROHS	Compliant/Exempted
UK-ROHS	Compliant/Exempted

Included Products

MF-130	–	Direct Burial Pipe Column, 13 ft 4 in
WB-CS24-3	–	Safety Grated Channel Support, 24 in wide for 3-1/2 in OD pipe
WB-CY210	–	Safety Grated Waveguide Bridge Channel, 24 in x 10 ft
WB-T24-3	–	Trapeze Kit, triple tee, 24 in wide, three rungs

©2024 CommScope, Inc. All rights reserved. CommScope and the CommScope logo are registered trademarks of CommScope and/or its affiliates in the U.S. and other countries. For additional trademark information see https://www.commscope.com/trademarks. All product names, trademarks and registered trademarks are property of their respective owners. Revised: August 20, 2024