1.0 GENERAL NOTES
1.1 ALL IMPERIAL DIMENSIONS ARE IN BRACKETS [X.XX]
1.2 MARK PART WITH IDENTIFICATION NUMBER
2.0 DESIGN NOTES
3.0 MANUFACTURING/SPECIAL REQUIREMENTS
3.1 TIGHTEN ALL BOLTS SECURING FLAT PLATES BY THE TURN-OF-NUT METHOD. TIGHTEN ALL U-BOLTS USING TURN-OF-NUT METHOD WITH ATTENTION TO LEAVE EQUAL DISTANCE AND EQUAL FORCE ON EACH LEG OF THE U-BOLT.
4.0 TEST
5.0 PACKAGING
5.1 PACKAGING SHALL MEET COMMSCOPE REQUIREMENTS PER DOCUMENT IS-PL-3005
5.2 PRINTED DOCUMENT TO BE PLACED INSIDE POLYBAG AND THEN IN SHIPPING CONTAINER
5.3 EXTRA HARDWARE MAYBE SUPPLIED, BAGGED AND SHIPPED

REVISIONS			
REV.	DESCRIPTION	DATE	APPROVED
A	INITIAL RELEASE	JL1183 16MAR23	JAHAINES 40168212CMO

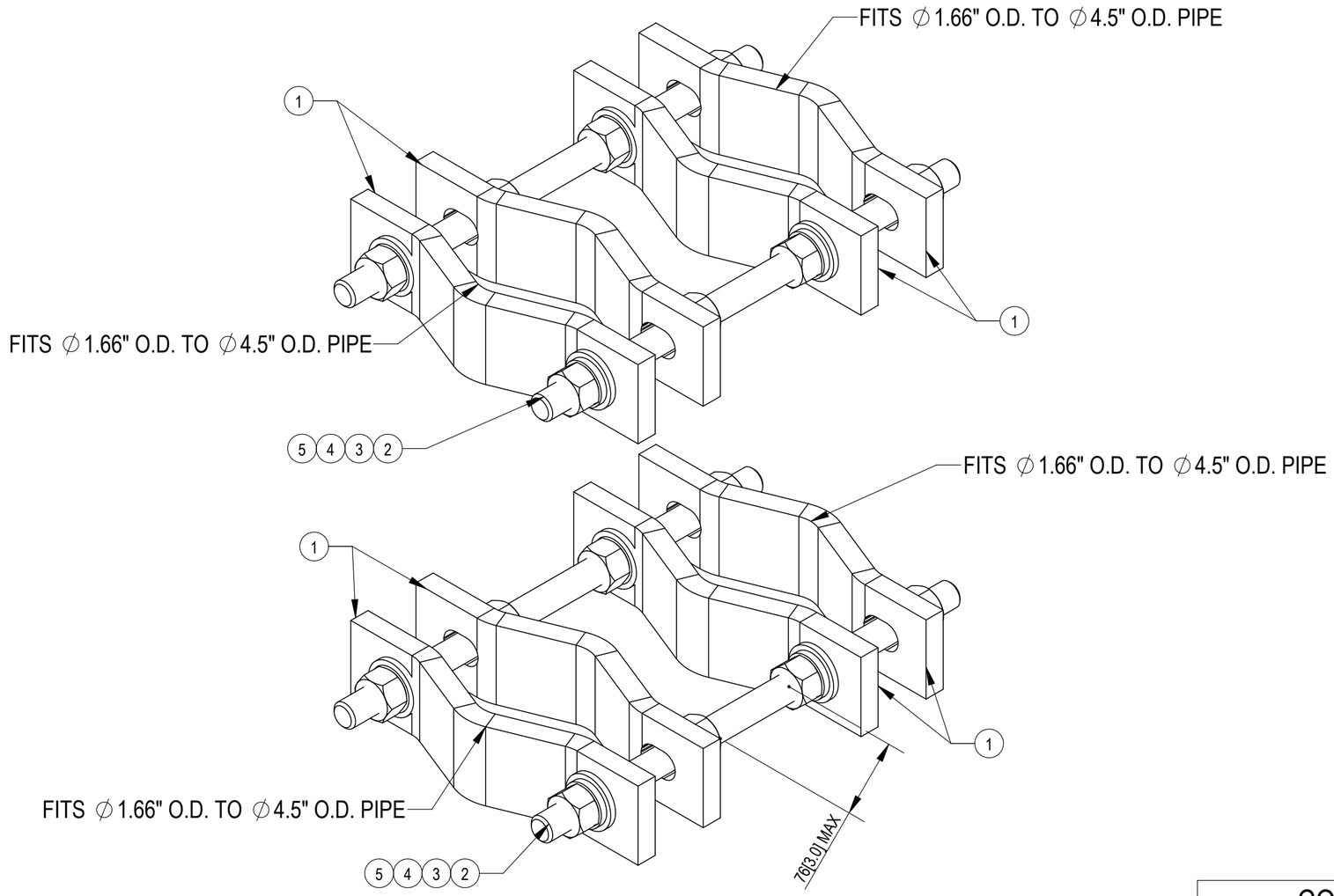

COMPONENT PART NUMBERS PROVIDED FOR ASSEMBLY PURPOSES;
INDIVIDUAL COMPONENTS MAY BE SHIPPED AS PARTS WITHIN AN INCLUDED KIT.

ITEM NO.	PART NUMBER	DESCRIPTION	QTY.
1	VCP	CLAMP, MOUNTING	8
2	MT-381	5/8" X 12" GALV THREADED ROD	4
3	GWF05A	GALV FLAT WASHER HARDENED 5/8", 1.3OD	16
4	GWL-05	5/8" GALV LOCK WASHER	16
5	GN-05	5/8" GALV HEX NUT	16

© 2023 CommScope, Inc. Confidential

DENSITY		lbs/in³
MASS	24.85	lbs
VOLUME	87.77	in³
SURFACE AREA	599.58	in²
DENSITY		g/mm³
MASS	11294.09	grams
VOLUME	1438448.38	mm³
SURFACE AREA	386828.45	mm²
HEIGHT	(101.6[4.0])	
LENGTH	304.8[12.0]	
WIDTH	212.7[8.4]	

COMMSCOPE, INC. OF NORTH CAROLINA

TOLERANCES
0 PLACE X[.X] ± 6[0.25]
1 PLACE .X[.XX] ± 3.0[0.12]
2 PLACE .XX[.XXX] ± 1.50[0.06]
ANGLES ± 2°

SAP MATERIAL MASTER: MUK-MSK3

FINISH

MATERIAL

UNLESS OTHERWISE SPECIFIED DIMENSIONS ARE IN MILLIMETERS INTERPRET PER ANSI Y14.5M-1994

	NAME	DATE
CE	JL1183	16MAR23
RW	JL1183	03/21/2023
AD	YW1045	03/23/2023
RE	YMENG	03/24/2023
ECN	40168212CMO	

TITLE: CLAMP, PIPE TO PIPE, 1.66" TO 4.50", H

SCALE: 1:2

DOCUMENT NO.: MUK-MSK3

SIZE: A2

Auth Group: INSL

MODEL			DRAWING			SHEET
VERSION	STATUS	REVISION	VERSION	STATUS	REVISION	
00	RE	A	00	RE	A	1 OF 1