TF-M3-8

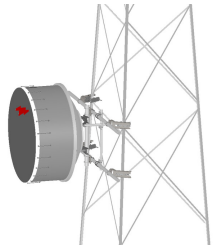

Tower Face Mount with dual 8 ft x 3-1/2 in OD face supports, includes pipe

Product Classification

Product Type	Tower face mount

General Specifications

Mounting	Angle 60°, 203.2 mm (8 in) | Angle 90°, 152.4 mm (6 in) | Straight or tapered legs up to 203.2 mm (8 in) OD
Note	Effective Projected Area (EPA) calculated using horizontal booms, vertical pipe mount, and mounting brackets.
Pipe, quantity	1
Tower Taper	Non-tapered | Tapered

Dimensions

Height	1,600.2 mm | 63 in
Face Width	2.438 m | 8 ft
Width	2,438.4 mm | 96 in
Length	304.8 mm | 12 in
Pipe Length	1,600.2 mm | 63 in
Face Support Pipe Diameter	114.3 mm | 4.5 in
Pipe Outer Diameter	114.3 mm | 4.5 in

©2024 CommScope, Inc. All rights reserved. CommScope and the CommScope logo are registered trademarks of CommScope and/or its affiliates in the U.S. and other countries. For additional trademark information see https://www.commscope.com/trademarks. All product names, trademarks and registered trademarks are property of their respective owners. Revised: February 26, 2024

TF-M3-8

Outline Drawing

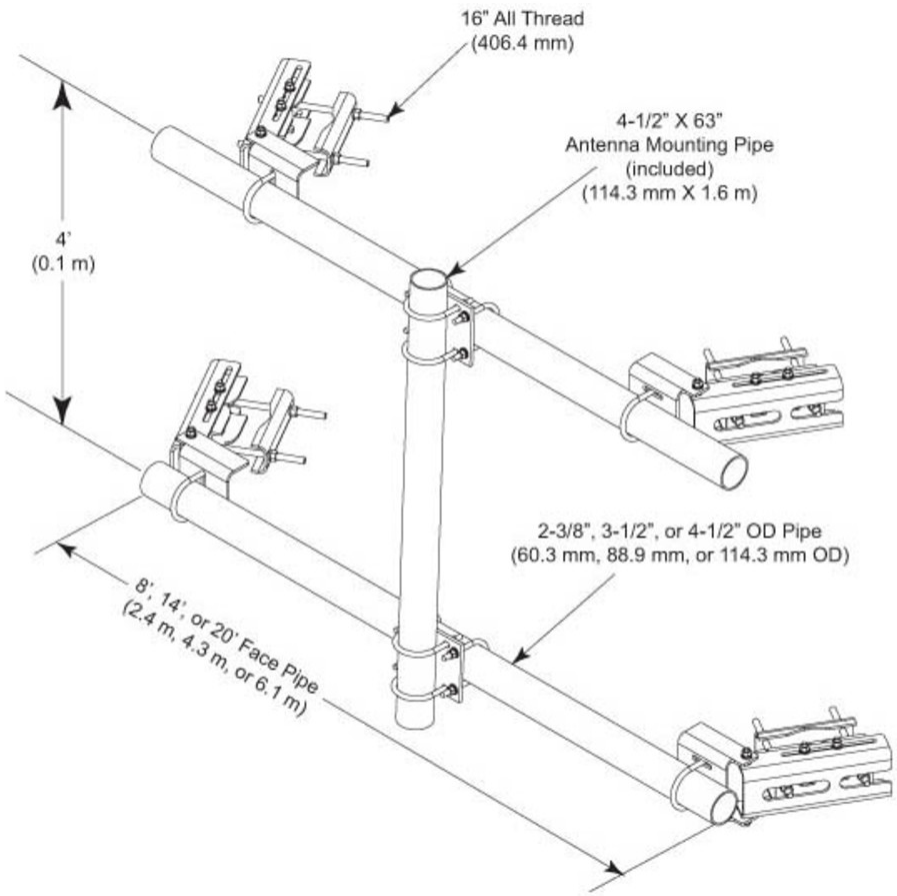

Material Specifications

Material Type	Hot dip galvanized steel

Environmental Specifications

EPA with 1/2 in (12 mm) radial ice	1.003 m² | 10.8 ft²
EPA without ice	0.78 m² | 8.4 ft²

Packaging and Weights

Included	Crossover plates | Pipes | Saddle mounts
Packaging quantity	1

©2024 CommScope, Inc. All rights reserved. CommScope and the CommScope logo are registered trademarks of CommScope and/or its affiliates in the U.S. and other countries. For additional trademark information see https://www.commscope.com/trademarks. All product names, trademarks and registered trademarks are property of their respective owners. Revised: February 26, 2024

TF-M3-8

Weight, net	249.476 kg | 550 lb

Regulatory Compliance/Certifications

Agency	Classification
ISO 9001:2015	Designed, manufactured and/or distributed under this quality management system

Included Products

MT-653-63	–	Plain End Pipe, 4-1/2 in OD x 63 in x .237" A500C 46Ksi
XP-3040	–	Crossover Plate, joins 3-1/2 in to 4-1/2 in OD round members

* Footnotes

EPA with 1/2 in (12 mm) radial ice	EPA—Effective Projected Area
EPA without ice	EPA—Effective Projected Area

©2024 CommScope, Inc. All rights reserved. CommScope and the CommScope logo are registered trademarks of CommScope and/or its affiliates in the U.S. and other countries. For additional trademark information see https://www.commscope.com/trademarks. All product names, trademarks and registered trademarks are property of their respective owners. Revised: February 26, 2024